Hearing Research 250 (2009) 27–37

Contents lists available at ScienceDirect

Hearing Research

journal homepage: www.elsevier.com/locate/heares

Research papers

Using hearing aid adaptive directional microphones to enhance cochlear implant performance

King Chung [a,*], Fan-Gang Zeng [b]

[a] Department of Speech, Language, and Hearing Sciences, Purdue University, 500 Oval Dr., West Lafayette, IN 47906, USA
[b] Department of Otolaryngology-Head and Neck Surgery, University of California, Irvine, 364 Med Surge II, Irvine, CA 92697, USA

ARTICLE INFO

Article history:
Received 30 October 2007
Received in revised form 7 January 2009
Accepted 9 January 2009
Available online 22 January 2009

Keywords:
Cochlear implant
Adaptive
Directional microphone
Hearing aid
Speech recognition
Sound quality

ABSTRACT

The goal of this study was to investigate whether adaptive microphone directionality could enhance cochlear implant performance. Speech stimuli were created by fitting a digital hearing aid with programmable omnidirectional (OM), fixed directional (FDM), or adaptive directional (ADM) microphones to KEMAR, and recording the hearing aid output in three noise conditions. The first condition simulated a diffused field with noise sources from five stationary locations, whereas the second and third condition represented one or three non-stationary locations in the back hemifield of KEMAR. Speech was always presented to 0° azimuth and the overall signal-to-noise ratio (SNR) was +5 dB in the sound field. Eighteen postlingually deafened cochlear implant users listened to the recorded test materials via the direct audio input of their speech processors. Their speech recognition ability and overall sound quality preferences were assessed and the correlation between the amount of noise reduction and the improvement in speech recognition were calculated. The results indicated that ADM yielded significantly better speech recognition scores and overall sound quality preference than FDM and OM in all three noise conditions and the improvement in speech recognition scores was highly correlated with the amount of noise reduction. Factors influencing the noise level are discussed.

1. Introduction

The number of cochlear implant users has exceeded 120,000 worldwide. Cochlear implants have evolved from a device used to aid speech reading to a modern device that allows its users to achieve high speech recognition scores in quiet (Zeng, 2004). Nevertheless, cochlear implant users still face great challenges in understanding speech in background noise. Their required signal-to-noise ratios (SNRs) for understanding 50% of sentences are roughly 5–15 dB, which are significantly higher than the roughly −10 dB SNR required by normal-hearing listeners (Nelson et al., 2003; Stickney et al., 2004; Zeng et al., 2005). Pearsons and colleagues (1976) reported that SNRs in many daily life environments were between 5 and 10 dB and SNRs decrease as noise levels increase, presenting a significant challenge to cochlear implant users who may only understand half of the speech or even less in these environments.

While most past research and development efforts have been spent on improving coding strategies and electrode designs, different front-end signal processing algorithms have been examined to enhance cochlear implant performance in background noise in recent years (Van Hoesel and Clark, 1995; Wouters and Vanden Berghe, 2001; Chung et al., 2004, 2006; Spriet et al., 2007). Directional microphones are microphones that more sensitive to sounds coming from the front than other directions. They have been widely used in hearing aids to reduce background noise, improve sound quality, and enhance listening comfort (Valente, 1999; Ricketts, 2001; Chung, 2004). Yet only one cochlear implant manufacturer has incorporated directional microphones into its cochlear implants. It is possible that by adopting the directional microphone algorithms available in hearing aids to cochlear implants, implant users might receive immediate relief in background noise.

1.1. Directional microphone classification

Directional microphones can generally be classified in at least three different ways (i.e., the order, fixed or adaptive polar patterns, and the orientation of the microphone array). The order of directional microphone is determined by slope of the low

Abbreviations: OM, omnidirectional microphone; FDM, fixed directional microphone; ADM, adaptive directional microphone; SNR, signal-to-noise ratio; KEMAR, Knowles Electronic Manikin for Acoustic Research; SSN, speech spectrum noise; BPN, band-pass noise; HPN, high-pass noise; MixedN, mixed noise; RMS, root mean square

* Corresponding author. Address: Department of Allied Health and Communicative Disorders, Northern Illinois University, 323 Wirtz Hall, DeKalb, IL 60115, USA. Tel.: +1 815 753 8033.
E-mail addresses: kchung@niu.edu (K. Chung), fzeng@uci.edu (F.-G. Zeng).

0378-5955/$ - see front matter © 2009 Elsevier B.V. All rights reserved.
doi:10.1016/j.heares.2009.01.005

frequency roll-off, without applying any frequency compensation strategies. For example, first-order directional microphones can be formed by either two omnidirectional microphones or a single microphone with two sound ports/entrances. Their slopes have a 6 dB/octave low frequency roll-off. Second-order directional microphones can consist of either three omnidirectional microphones or two first-order directional microphones (Thompson, 2003). Their slopes have a 12 dB/octave roll-off.

In addition, directional microphones can have fixed or adaptive polar patterns. Polar patterns are frequency-specific plots displaying the sensitivity of the directional microphone to sounds from different directions. The shapes of polar patterns are determined by the ratio of the internal delay and the external delay. The external delay is related to the distance between the microphones/ports and it cannot be altered once the directional microphone leaves the factory. The internal delay is the delay implemented between the signals received from the microphones/ports. The delay can be either an acoustic network that cannot be altered after the microphone is manufactured or an electronic delay that can be manipulated in real-time.

Directional microphones with fixed external and internal delay ratios have fixed polar patterns. Common polar patterns for fixed directional microphones include bipolar (nulls with maximum attenuation at 90° and 270°), cardioid (a null at 180°), hypercardioid (nulls at 120° and 240°), and supercardioid (nulls at 150° and 210°, Chung, 2004). Adaptive directional microphones, on the other hand, are implemented with algorithms to change the internal delay, allowing the directional microphone to adopt different polar patterns in different environments. The operational goal is to automatically change to a polar pattern yielding minimum noise output but with the constraint that the maximum sensitivity is kept in front.

Further, directional microphones can be classified by the orientation of the microphone array relative to 0° azimuth. Directional microphones implemented parallel to the direction of −90° to +90° are referred to as broadside arrays (e.g., a microphone on each ear, Greenberg and Zurek, 1992). Directional microphones implemented parallel to the direction of 0° to 180° are referred to as end-fire arrays (e.g., all microphones on one ear). As the broadside array needs a microphone to be placed at each ear, directional microphones in commercially available hearing aids or cochlear implants primarily use the more convenient end-fire array.

1.2. Adpative directional microphones in hearing aids

Adaptive directional microphones implemented in commercially available hearing aids are mostly first-order directional microphones. They have been reported to improve speech understanding (Ricketts and Henry, 2002; Kuk et al., 2005; Blamey et al., 2006; Mackenzine and Lutman, 2005) and enhance sound quality (Mackenzine and Lutman, 2005).

Various factors can determine if adaptive directional microphones show advantages when compared with fixed directional microphones. Ricketts and Henry (2002) reported that an adaptive directional microphone provided 2.5 dB of improvement in speech recognition compared to the same directional microphone with fixed cardioid pattern when two noise sources were located on one side (70° and 110°). This result was likely because the adaptive directional microphone had adopted the bipolar pattern which was more effective in reducing noise than the cardioid pattern in this environment. The adaptive, over fixed, direction microphone advantage diminished with two noise sources coming from the back (e.g., at 160° and 200°), likely because fixed directional microphones were already effective in reducing noise from these locations. For moving noise sources, the adaptive directional microphone performed similarly to the fixed directional microphone when the noise source was moving across 0° to 360° (Ricketts and Henry, 2002). In addition, Bentler and colleagues (2004) tested the same hearing aid in the presence of five concurrent noise sources located between 110° and 250°. At any instant, one of the five noise sources was presented at a level that was an average of 10 dB higher than the other individual noise sources. The authors reported no advantage of the adaptive directional microphone comparable with the fixed directional microphone.

These results indicated that the polar pattern of the fixed directional microphone as well as the location(s) and number of noise source(s) affected the relative performance of adaptive and fixed directional microphones. Adaptive directional microphones are beneficial if they can adopt a polar pattern with lower microphone sensitivity than the fixed directional microphone for the particular noise locations. They tend to be less effective if multiple noise sources co-exist in the environment. It is, therefore, important to present noises from various locations with multiple configurations when comparing the two microphones.

Some hearing aids have also been implemented with hybrid first-order and second-order adaptive directional microphones (Powers and Hamacher, 2002). These hybrid adaptive directional microphones use a first-order directional microphone in the low frequency region and a second-order directional microphone in the high frequency region. When compared with first-order adaptive directional microphones, this hybrid second-order adaptive directional microphone did not yield higher speech recognition scores for the hearing aid users with one noise source moving from the sides and back (Bentler et al., 2006) nor higher preferences in real-world environments (Palmer et al., 2006).

1.3. Adaptive directional microphone in cochlear implants

Vanden Berghe and Wouters (2005) designed and implemented a first-order-plus adaptive directional microphone and implemented it in a commercially available cochlear implant system. This particular microphone utilized an omnidirectional microphone and a first-order fixed directional microphone with unspecified polar pattern. As it had one omnidirectional microphone more than a first-order directional microphone but one directional microphone short of a second-order directional microphone, the term first-order-plus adaptive directional microphone is used here. Wouters and Vanden Berghe (2001) tested four cochlear implant listeners' speech recognition scores using this microphone in an experimental device. They presented speech at 0° and one noise source at 90° in the laboratory. Compared to the first-order fixed directional microphone alone, the first-order-plus adaptive directional microphone improved SNR for 50% speech recognition for an average of 10 dB.

Spriet and colleagues (2007) tested five cochlear implant users' speech recognition thresholds when they wore the same first-order plus adaptive directional microphone and its first-order fixed directional microphone. Speech was presented at 0° with one noise source at 90° or three noise sources at 90°, 180°, and 270°. Spriet and colleagues reported that, compared to the first-order fixed directional microphone, the first-order plus adaptive directional microphone improved speech reception thresholds by 7.2–15.9 dB with one noise source and by 1.5–11.6 dB with three noise source. Three listeners also evaluated the two microphones in daily listening environments but reported minimal preference for the first-order-plus adaptive directional microphone compared to the first-order fixed directional microphone.

While outcomes of applying directional microphones to hearing aids and cochlear implants generally seem encouraging, two of the three manufacturers are still using omnidirectional microphones in their cochlear implants. As product development is a time-consuming and lengthy process, adopting directional microphone algorithms developed for hearing aids to cochlear implants can potentially shorten the research and development process and pro-

vide immediate help to cochlear implant users, especially in background noise. In addition, some other algorithms that are currently only available in hearing aids could potentially benefit cochlear implant users. Examples include automatic microphone matching algorithms that can match the frequency responses of the microphones in real-time and maintain the directional effect over time, or automatic microphone switching algorithms that can switch to omnidirectional microphone mode to allow better audibility of speech from the back, reduce wind noise, and reduce internal circuit noise in quiet environments.

Given the potential benefits of hearing aid directional microphone algorithms, we examined the effects of a first-order adaptive directional microphone on cochlear implant performance in environments with one or three non-stationary noise sources and five stationary noise sources. The output of a digital hearing aid was recorded in KEMAR's (Knowles Electronic Manikin for Acoustic Research, Burkhard and Sachs, 1975) ear canal when the hearing aid was programmed to omnidirectional (OM), fixed directional (FDM), or adaptive directional (ADM) microphone modes. Eighteen cochlear implant listeners then listened to the recorded speech via the direct audio input of their speech processors. Their speech recognition ability and overall sound quality preference ratings were measured. The characteristics of the test stimuli were also analyzed to examine factors affecting the noise levels in the recordings.

2. Materials and methods

2.1. Listeners

Calculated from data reported in a previous study (Chung et al., 2006), the standard deviation of the difference between omnidirectional and directional microphones at an SNR of +5.5 dB was 18.2%. For an effect size of 15% to be statistically significant, at least 15.3 listeners were needed to achieve a power of 0.8 (p adjusted for 3 post-hoc comparisons). As a multiple of 6 listeners was needed to achieve counterbalance of the testing conditions to guard against potential presentation order effects and any difference in sentence list equivalency, 18 listeners were needed for this study.

Nineteen postlingually deafened cochlear implant users were recruited to participate in this study. All listeners reported that they were able to converse on the telephone with family and friends (i.e., they could understand open-set sentences without visual cues). Data from one of the listeners were excluded from analysis because she obtained a speech recognition score of less than 10% in the easiest experimental condition. The remaining 18 listeners consisted of four males and 14 females with an age range of 31–78 years (mean age = 60.6 years). All the listeners had their cochlear implants activated at least 12 months prior to their participation in this study except for Listener 2, who had been activated for 10 months. They participated in both the speech recognition test and the overall sound quality preference rating tasks except for Listener 2 who did not complete the latter due to a family issue. The demographic and cochlear implant information of the listeners is reported in Table 1. The human subject protocols were approved by the Institutional Review Board of both Purdue University and University of California, Irvine where the study was carried out.

2.2. Hearing aid directional microphone algorithm

The digital hearing aid was a commercially available hearing aid with 15-signal processing channels. Its directional microphone was formed by two omnidirectional microphones, a delay network, and a parameter controller (Fig. 1, Jensen, 2006). The delay network consisted of five summing nodes, two phase delay devices, and two adjustable attenuators. The front and back microphones were 0.9 cm apart, contributing to an external delay, A. The microphone outputs were sent to the delay network in which an internal delay T was implemented in phase delay devices 1 and 2. The overall combined signal (Y) was:

$$Y = X_{\text{front}} * (1 - q * e^{-j\omega T}) + X_{\text{back}} * (q - e^{-j\omega T})$$

where X_{front} is the output of the front microphone; X_{back} is the output of the back microphone and $X_{\text{back}} = X_{\text{front}} * e^{-j\omega A}$, q is a parameter determining the amount of gain in the adjustable attenuators and $-1 \leqslant q \leqslant 1$.

In this particular implementation, T was set to be equal to A. When q equaled 1, the polar pattern of the microphone was omnidirectional. When $q = 0$, the pattern was cardioid. As q varied between 0 and -1, the cardioid pattern changed to patterns having nulls on both sides of 180°, gradually moving to 90° and 270°. When $q = -1$, the pattern became bipolar. When programmed to FDM, the polar pattern was set to be hypercardioid in free field (i.e., $q = -0.5$). When programmed to ADM, the Parameter Controller constantly monitored the output of Summing Node 5. It applied a least mean square algorithm and adjusted the q value in real-time so that the output of Summing Node 5 was minimized. This implementation allowed the hearing aid to change smoothly from omnidirectional to directional microphone as well as to directional

Table 1
Demographic and cochlear implant information of listeners.

Listener	Gender	Age (years)	Test ear	Number of years of CI use	Speech processor	Coding strategy
1	F	76	L	4;11	ESPrit 3G	ACE
2	F	51	L	0;10	Freedom	ACE
3	M	77	L	9;6	ESPrit 3G	ACE
4	F	39	L	2;9	TEMPO+	CIS
5	M	30	L	2;9	ESPrit 3G	ACE
6	F	72	L	1;4	TEMPO+	CIS
7	F	73	L	2;8	Aria	HiRes
8	M	49	R	13;10	Spectra 22	SPEAK
9	F	43	L	6;9	TEMPO+	CIS
10	F	63	R	3;1	ESPrit 3G	ACE
11	F	79	L	3;1	ESPrit 3G	ACE
12	M	65	L	16;10	Spectra 22	SPEAK
13	F	39	L	1;8	ESPrit 3G	ACE
14	F	69	R	5;9	Clarion	MPS
15	F	69	L	5;1	Clarion CII	HiRes-S
16	F	53	R	2;11	Esprit 3G	ACE
17	F	74	L	13;2	S-series	CIS
18	F	70	R	6;10	ESPrit 3G	ACE

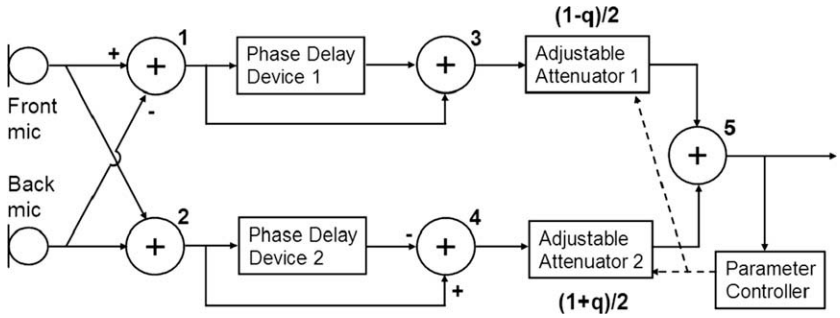

Fig. 1. ADM schematic. The schematic of the adaptive directional microphone used in this study.

microphone with a null(s) at any azimuth from 90° to 270° depending on the location of the noise.

2.3. Hearing aid frequency response programming

All programming was carried out in a test chamber with reverberation times (R_{60} = time for the sound pressure level to decrease 60 dB) of 137 ms at 125 Hz, 336 ms at 250 Hz, 129 ms at 500 Hz, 41 ms at 1000 Hz, 53 ms at 2000 Hz, and 75 ms at 4000 Hz. The critical distance of the room was measured to be 129 cm for Loudspeaker 1 and 118 cm for Loudspeaker 4.

Prior to frequency response programming, the hearing aid was fit to KEMAR's right ear using an occluded skeleton earmold with standard #13 tubing. As there would be no acoustic pathway to transmit unprocessed sounds into the cochlear implant speech processor, the performance of the cochlear implant listeners obtained with an occluded earmold should reflect the actual performance when directional microphones are implemented in speech processors. In addition, the hearing aid was set to linear mode to avoid the hearing aid providing compression in addition to the listeners' cochlear implants. Other signal processing algorithms, such as noise reduction and feedback suppression algorithms, were disabled to minimize their effects on hearing aid actions.

As different cochlear implants have different pre-emphasis high-pass filters, the goal was to program the in-situ frequency responses of the OM, FDM, and ADM modes to be relatively flat so that the effect of the hearing aid frequency response on cochlear implants was minimal. KEMAR wearing the hearing aid was placed in an eight-loudspeaker array in the test chamber (Fig. 2). A 75 dB composite noise was presented from Computer 1 using Audition 1.0 (Adobe) sound editing software to a Delta1010 eight-channel external sound card (M-Audio), two power amplifiers (Crown 4210), and a Mackie HR824 powered loudspeaker (Loudspeaker 1). Loudspeaker 1 had a frequency range of 0.039–20 kHz with ±1.5 dB amplitude deviations and a maximum output of 100 dB SPL. The frequency response of the composite noise was stored as a reference in the SpectraPlus program (Pioneer Hill Software) on Computer 2.

The frequency response of the hearing aid output at OM and FDM modes was picked up by an ER-11 ½″ microphone (Etymotic Research) in the medial opening of a Zwislocki coupler. The output of the ER-11 preamplifier was sent to a TUBEPre preamplifier (PreSonus), an Extigy external sound card, and Computer 2 in the laboratory. The TUBEPre preamplifier provided a convenient way for the examiner to adjust the level of the incoming signal in the laboratory so that the amplitude of the recorded signal would be high enough to utilize the upper digital range of the sound card but low enough not to exceed the upper digital limit. The amplifier of the ER11 ½″ microphone was set to flat. The gain of the hearing aid across frequency regions was adjusted in Noah Hearing Aid Fitting software (Himsa) in Computer 2 via a HIPRO programming interface. The frequency response of the hearing aid was matched to that of the reference as much as possible, meaning that the frequency response of the recording system including all the components in the signal presentation and recording path was relatively flat and the ear canal resonance was eliminated. The gain settings of ADM were identical to those of OM but with the adaptive directional microphone option turned on.

After the hearing aid program was determined, the hearing aid output in response to the 75 dB SPL composite noise was recorded for 10 s in each mode and analyzed in one-third octave bands (Fig. 3). This match ensured that any differences in speech recognition scores were due to the differences in microphone design but not the differences in spectra.

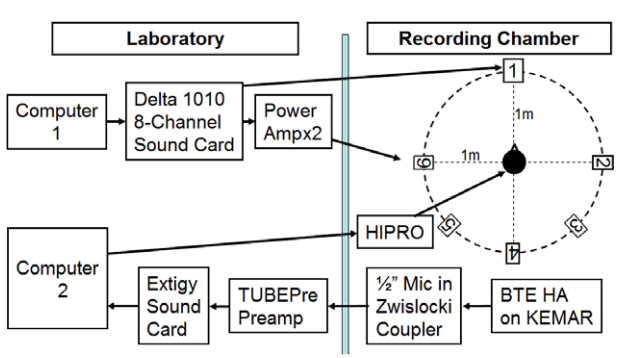

Fig. 2. Programming and recording equipment. The equipment set-up used during the programming of hearing aid frequency responses, the measurement of polar patterns, and the recording of test materials.

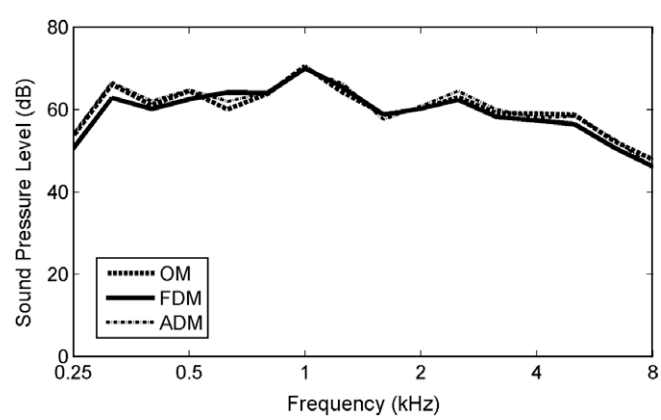

Fig. 3. In-situ frequency responses of OM and FDM. The frequency responses of the adaptive directional, fixed directional (FDM), and omnidirectional (OM) microphone modes measured when the digital hearing aid was worn on KEMAR.

2.4. Polar patterns

Polar patterns were measured in the test chamber when the hearing aid was worn on KEMAR. A 75 dB SPL composite noise was presented from Loudspeaker 1 when the hearing aid was set to the OM or the FDM mode (Fig. 2). The hearing aid output was recorded on Computer 2 when KEMAR was turned at 10° intervals. Then the overall level of the recording made at 0° azimuth was normalized to 75 dB SPL. The hearing aid output recorded at different azimuths was analyzed in one-third octave bands and the levels at 500, 1000, 2000, and 4000 Hz were plotted as polar patterns (Fig. 4).

As the loudspeakers in the speech recognition tests were placed in the horizontal plane at the ear level, we calculated the average in-situ microphone sensitivity differences between FDM and OM in the horizontal plane. Because the sound pressure level (X) measured at an azimuth (for example, Location 1) equaled:

$$X_1 = 20\log(P_1/P_{\mathrm{ref}}),\ \mathrm{dB\ SPL} \tag{1}$$

where P_1 was the sound pressure at Location 1 and P_{ref} was the reference sound pressure.

The sound pressure at Location 1 divided by the reference sound pressure equaled:

$$P_1/P_{\mathrm{ref}} = \log^{-1}(X_1/20) \tag{2}$$

Then, the average sound pressure (X_{avg}) for the 36 measured locations divided by the reference sound pressure equaled:

$$X_{\mathrm{avg}}/P_{\mathrm{ref}} = (1/36) * \left\{\sum_{i=0}^{35}[\log^{-1}(X_i/20)]\right\} \tag{3}$$

Let the average sound pressure level of OM = $\mathrm{OM_{avg}}$ and that of FDM = $\mathrm{FDM_{avg}}$, the microphone sensitivity differences in the horizontal plane between OM and FDM equaled:

$$20\log(\mathrm{OM_{avg}}/\mathrm{FDM_{avg}}),\ \mathrm{dB} \tag{4}$$

By substituting Eq. (3) into Eq. (4), FDM was found to be 5.9, 5.4, 4.5, and 5.7 dB less sensitive to sounds coming from the sides and back than OM at 500, 1000, 2000, and 4000 Hz one-third octave bands, respectively. Note that these values reflected how much more directional was FDM compared to OM, not the directivity index of FDM. The polar pattern of ADM could not be measured because the authors did not have access to the facilities necessary for such measurements.

2.5. Noise conditions

Four background noises were used in this study:

(1) band-pass noise (BPN) – created by filtering a white noise with a pass-band between 2000 and 3000 Hz;

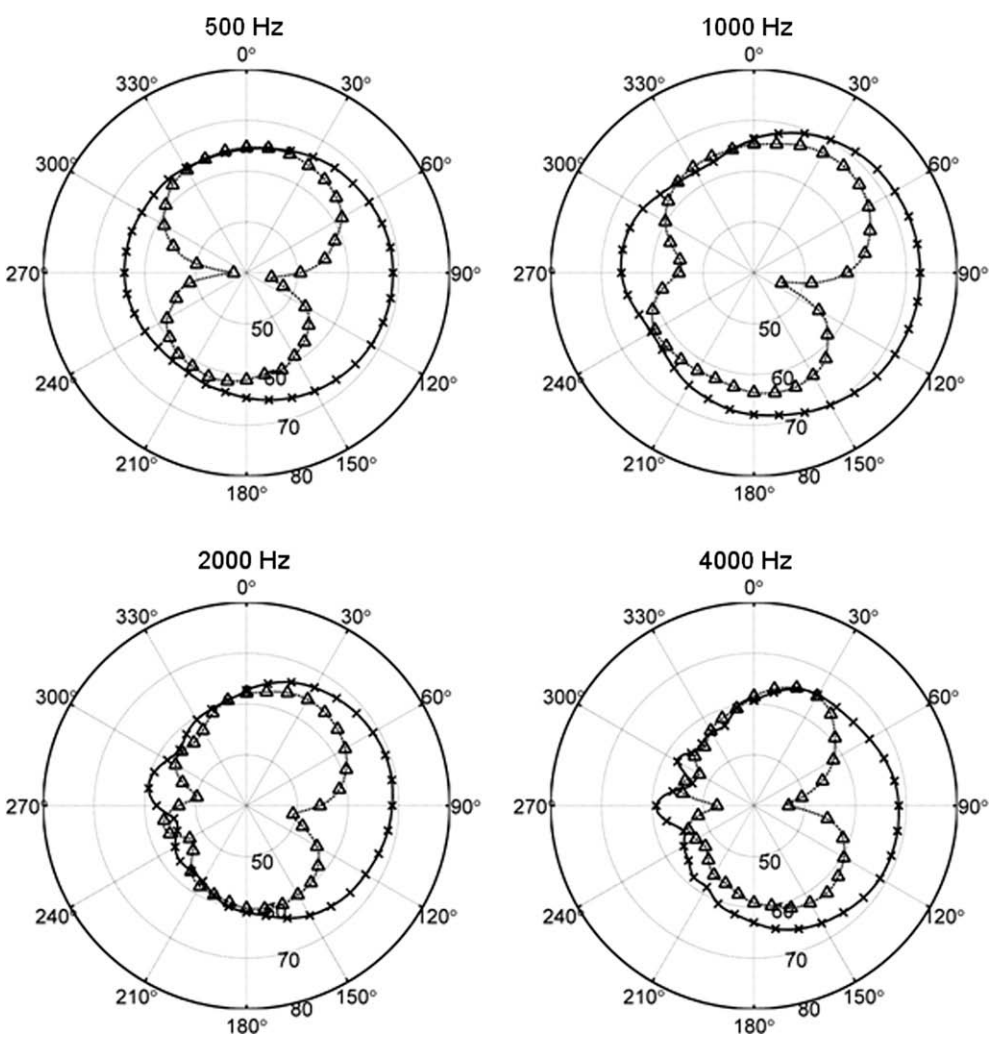

Fig. 4. Polar patterns of OM (×) and FDM (Δ) at 500, 1000, 2000, and 4000 Hz.

(2) high-pass noise (HPN) – created by filtering white noise with a high-pass filter that had a cut-off frequency of 4000 Hz; and
(3) speech spectrum noise (SSN) – the noise used in the Hearing in Noise Test (HINT, Nilsson et al., 1994) to represent the long-term speech spectrum;
(4) mixed noise (MixedN) – a mixture of SSN, BPN, and HPN.

Fig. 5 shows the spectra of the four background noises recorded in the test chamber. As environmental noises could have different frequency contents, the noise stimuli were chosen to represent noise with dominant frequency components in the low, mid, and high frequency regions. They also allowed the authors to gain more understanding of the actions of the microphones in situ when the noise level in the recordings was analyzed in conjunction with the microphone's frequency-specific polar patterns, the location(s) and frequency contents of the noise stimuli (see Section 4 for details).

The noise stimuli were arranged to form three Audition sessions:

(i) Vary1N – one SSN noise source was presented from one of the five loudspeaker locations (Loudspeakers 2–6, Fig. 2). The Vary1N condition was used to simulate environments in which one noise source existed in different locations at the sides and the back. For example, when a cochlear implant user converses with a friend (fixed target) while some other people are talking at various locations (variable noise) behind the user. It can also simulate environments in which the relative locations of speech and noise change over time. For instance, when the cochlear implant user turns his/her head to listen to multiple talkers in the front (variable target) while some other people are talking at the back (fixed noise).
(ii) Vary3N – three noise sources were presented from any three of the five locations (Fig. 2). The three noises were SSN, BPN, and HPN. Each was presented from a different loudspeaker location during a presentation. The Vary3N condition was used to simulate environments in which the *relative* locations of the noise and/or speech changed over time. For example, when the cochlear implant user is in an environment with multiple noise sources at fixed locations and he/she moves around to chat with various guests (i.e., the relative locations of the speech and noise varied). It was also used to simulate environments in which three different noises arrive from different locations (e.g., when the cochlear implant user goes from one environment to another environment in which the noise sources are located in different places/configurations).
(iii) Sta5N – a diffused noise condition with noise presented from all five loudspeakers. The noise presented to Loudspeakers 2–6 were uncorrelated MixedN. The Sta5N condition was used to simulate an environment in which noise with a wide frequency spectrum came from the sides and back (e.g., when the cochlear implant user is conversing with a friend with a large fountain/waterfall behind him or her).

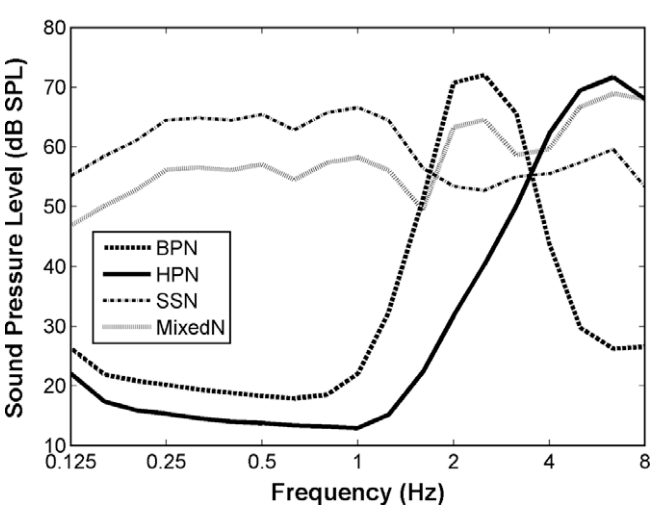

Fig. 5. Spectra of the four noises. Spectra of the speech spectrum noise (SSN), band-pass noise (BPN), high-pass noise (HPN), and mixed noise (MixN) used as background noise in the speech recognition and sound quality rating tasks.

In an effort to make comparisons consistent, the presentation sequences and configurations of the noise sources were predetermined for the 10 sentences of the HINT lists in the Vary1N and Vary3N conditions. The noise sources were also arranged to be presented from each loudspeaker for an equal number of times during the course of the 10 sentences. For example, for Vary3N, Sentence 1 of all HINT lists was recorded when BPN was presented at Loudspeaker 2, HPN at Loudspeaker 3, and SSN at Loudspeaker 6. Sentence 2 was recorded when BPN was presented at Loudspeaker 3, HPN at Loudspeaker 5, and SSN at Loudspeaker 4. Each noise was presented from each loudspeaker location four times during the course of the 10 sentences. Presenting noise sources from all five loudspeakers for an equal number of times ensured that the results obtained would be due to the differences in microphone modes instead of the bias introduced by uneven noise source locations.

2.6. Recording of the speech recognition testing materials

Prior to making recordings of the test stimuli, the sound field was calibrated by placing a Quest 1200 Precision Integrating Sound Level Meter (Type I, *z*-weighting) at the center of the loudspeaker array. The goal was to achieve a SNR of +5 dB in all three noise conditions. A SNR of +5 dB was chosen because it was the SNR in a typical noisy environment (Pearsons et al., 1976). The calibration noise from the speech track of the HINT test was calibrated to 80 dB SPL and the overall noise levels were calibrated to 75 dB SPL by adjusting the volume settings of individual loudspeakers in Audition. The level of the individual noise loudspeaker was calibrated to 75, 70.2, and 68 dB SPL in Vary1N, Vary3N, and Sta5N, respectively. These levels were calculated using the following formula:

$$\text{Noise level of individual loudspeaker} = 75 - 10\log(\text{Number of loudspeakers}) \quad (5)$$

The testing materials were then recorded using the equipment shown in Fig. 2. The HINT sentences were presented to Loudspeaker 1 and noise was presented to Loudspeakers 2–6 which were Hafler M5 loudspeakers with frequency ranges of 0.07–21 kHz with ±3 dB amplitude deviations with maximum outputs of 100 dB SPL. According to the pilot measurement data, ADM could require up to 10 s to adapt to the "appropriate" polar pattern as determined by the algorithm. This adaptation time is defined as the time from the onset of the noise to the time the noise level reduced to be within 1 dB of the steady-state noise level. Each HINT sentence was, therefore, presented 25 s after the starting of noise presentation to allow ADM time to be fully adapted to the determined polar patterns.

The hearing aid output was recorded as wav files on Computer 2 using Audition. Three HINT lists were recorded in each noise condition (i.e., Lists 15–17 in Vary1N, Lists 12–14 in Vary3N, and Lists

18–20 in Sta5N). The recorded files were then edited to separate lists for testing cochlear implant listeners.

2.7. Speech recognition test

Prior to the speech recognition test, the presentation order of noise conditions, microphone modes, and the assignment of the sentence lists were counterbalanced among every six listeners. In addition, the keywords in each HINT sentence were analyzed and underlined for keyword scoring (see examples in Appendix). Any articles or auxiliary words for continuous tense were not counted as keywords. The number of keywords per list ranged from 41 to 44.

After that, six HINT sentences in background noise with root mean square (RMS) and peak levels similar to the testing materials were presented to the listeners one by one. Each listener rated the loudness of *speech* using the Independent Hearing Aid Fitting Forum (IHAFF, 1994) loudness scale. The comfortable level was defined as the sound card output level at which the listener rated *speech* as a "4" (Comfortable) in three ascending runs. Setting the presentation level (i.e., sound card volume) this way was analogous to setting the cochlear implant volume control so that speech was comfortable to listen to in real-world listening environments. Once the comfortable level was determined, the listener was asked if he or she noticed any distortions in speech in order to determine if the speech peaks were being severely compressed at the input of cochlear implants at the chosen volume setting. None of the listeners reported distortions at their comfortable listening levels.

During the speech recognition test, the listeners were blinded to the microphone modes and the testing conditions. They were asked to repeat as many words as possible after listening to a sentence. They were encouraged to guess when unsure. The listeners' responses were scored off-line. Any deviations from the keywords were counted as incorrect. The variations allowed in the original HINT test (e.g., is/was), however, were allowed. Performance in terms of percentage correct was calculated by the number of keywords repeated correctly divided by the total number of keywords in the sentence list.

2.8. Preparation of sound quality rating materials

A set of six HINT sentences was recorded in each noise condition and each microphone mode using the recording set-up and procedures described in the recording of the speech recognition testing materials. Each set of sentences consisted of most phonemes in English, except /zh/ as in "pleasure" (see Appendix for details). For Vary1N, the order of presentation for the noise sources was the same as the first five configurations shown in Fig. 6. The sixth configuration was at 180°. For Vary3N, the noise configurations were the same as the first six sentences shown in Fig. 6.

The recorded sentences were then edited using Audition to form tokens in preparation for different comparison pairs. Each token consisted of 500 ms of noise, the sentence, followed by 200 ms of noise. In order to eliminate the order of presentation effect, three sentences from each noise condition were combined to form three test combinations (i.e., OM_FDM, FDM_ADM, ADM_OM) and the other three sentences formed reversal combinations (i.e., FDM_OM, ADM_FDM, OM_ADM). A 300 ms silence was inserted between tokens to indicate the boundaries of the tokens.

Additionally, a reference combination was included in each noise condition to check the reliability of listeners' responses and to estimate the variability of the rating tasks (i.e., FDM_FDM in Vary1N, OM_OM in Vary3N, and ADM_ADM in Sta5N). Two identical sentences were presented twice to form a reference pair. In order to minimize the order effect, three of the comparison pairs are labeled C1_C2 and the other three C2_C1 in each noise field (i.e., three FDM1_FDM2 and three FDM2_FDM1 in Vary1N).

	Vary1N										Vary3N										Sta5N									
Speaker	S1	S2	S3	S4	S5	S6	S7	S8	S9	S10	S1	S2	S3	S4	S5	S6	S7	S8	S9	S10	S1	S2	S3	S4	S5	S6	S7	S8	S9	S10
2			SSN				SSN				BPN		SSN	HPN		HPN	SSN			BPN	MN	MN	MN	MN	MN	MN	MN	MN	MN	MN
3					SSN				SSN		HPN	BPN			SSN	BPN		HPN	SSN		MN	MN	MN	MN	MN	MN	MN	MN	MN	MN
4		SSN								SSN		SSN		BPN	HPN		HPN	BPN		SSN	MN	MN	MN	MN	MN	MN	MN	MN	MN	MN
5						SSN		SSN				HPN	BPN		BPN	SSN		SSN	HPN		MN	MN	MN	MN	MN	MN	MN	MN	MN	MN
6	SSN			SSN							SSN		HPN	SSN			BPN		BPN	HPN	MN	MN	MN	MN	MN	MN	MN	MN	MN	MN

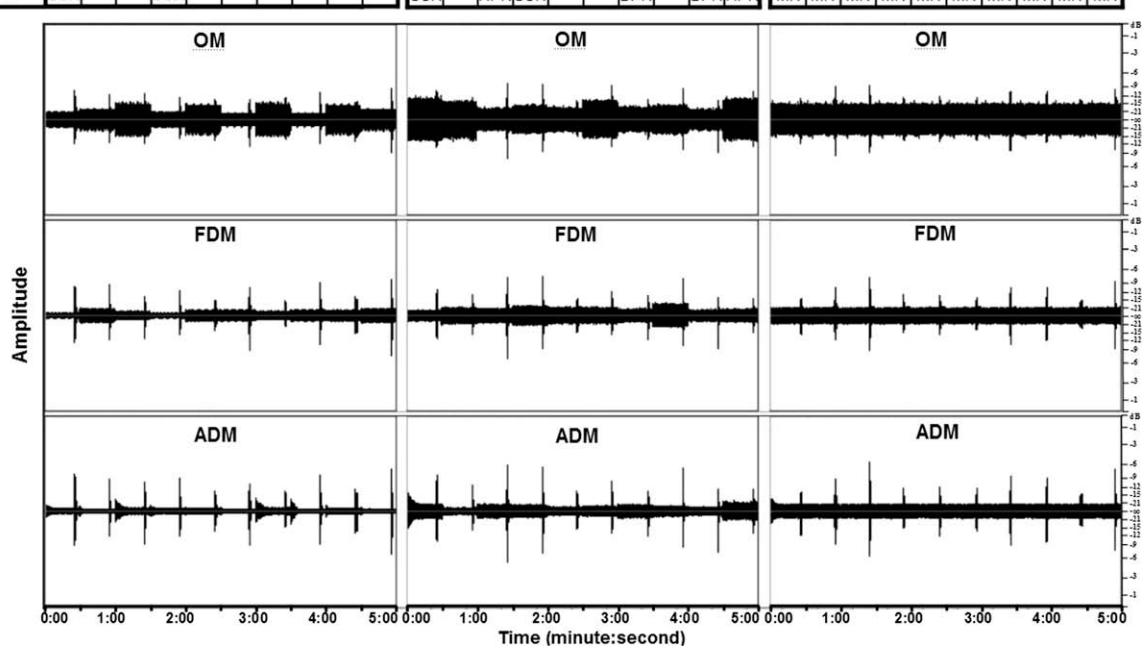

Fig. 6. The presentation sequences of noise and the amplitude envelopes of test stimuli. The table shows the presentation orders and loudspeaker locations of the four background noises and the waveforms display the test stimuli recorded with three microphones (OM, FDM, and ADM) at the corresponding noise locations.

2.9. Overall sound quality preference ratings

All the comparison pairs were presented at the individual listener's comfortable listening level as determined in the speech recognition test. The listeners rated their overall sound quality preferences in a combined paired-comparison categorical-rating task as described in Chung and colleagues (2006). Their task was to tell the examiner whether they liked the first or the second presentation and how much they liked the presentation of choice using any number from 1 to 100 in the rating scale shown in Fig. 7. They were instructed to give a 0 if they had no preference for either presentation. The presentation order of the tokens was randomized. The listeners were blinded to the experimental conditions during the rating tasks. Each listener rated a total of 72 comparison pairs (i.e., 6 sentences × 4 combinations × 3 noise conditions).

After the test, all listeners' responses were recorded in a spreadsheet. The preference scores obtained by each test combination and reversal combination in a noise condition were collapsed (e.g., the preferences scores obtained in FDM_OM and OM_FDM in the Vary1N was collapsed). In addition, the preference scores were recorded under the preferred condition and a 0 was recorded in the non-preferred condition. For example, in a FDM_OM comparison, if a listener preferred 1 for 30 points, a 30 was entered under FDM and a 0 was entered under OM. If a listener preferred 2 for 15, a 15 was entered under OM and a 0 was entered under FDM. Afterwards, the average preference score for a microphone mode in each combination was calculated for each listener.

3. Results

3.1. Acoustic analysis

The amplitude envelope of each recorded sentence in a HINT list, along with the noise configuration, is shown in Fig. 6. Notice that the peak values of sentences (i.e., the spikes) were similar among OM, FDM, and ADM, indicating similar speech levels among the conditions. Additionally, the noise levels of ADM are generally lower than the FDM, suggesting that ADM was functioning in the directional mode in all noise conditions.

The amount of noise reduction among the three microphone modes was calculated by measuring the average RMS levels of a 10-s noise segment immediately preceding each sentence. The noise levels measured in a condition were then subtracted from those obtained from the corresponding sentence in another condition and the results are reported in Table 2. As the locations and the sequence of the noise sources were identical for Sentences 1–10, the amount of noise reduction calculated was expected to be identical for all the HINT lists in a noise condition. On average, ADM produced the lowest noise level and OM produced the highest noise level among the three noise conditions.

3.2. Speech recognition

Fig. 8 shows the average speech recognition scores and standard deviations obtained in the OM, FDM, and ADM modes. A three-way repeated measure ANOVA revealed significant main effects of microphone mode [$F(2,32) = 92.3$, $p < 0.01$] and noise condition [$F(2,32) = 54.3$, $p < 0.01$] on speech recognition. No significant interaction effect was found.

Post-hoc Tukey paired-comparison tests were conducted to examine the effect of noise conditions. The results indicated that the speech recognition scores obtained in Vary1N were significantly higher than those obtained in Vary3N and Sta5N ($p < 0.017$, p adjusted for three post-hoc tests conducted to reduce Type I error). The score difference between Vary3N and Sta5N was not significant. Post-hoc Tukey paired-comparison tests were also conducted to examine the effects of microphone modes. ADM yielded significantly higher speech recognition scores than FDM, which, in turn, yielded higher scores than OM in all three noise conditions ($p < 0.0042$, adjusted for three tests conducted). OM, FDM, and ADM produced an average score of 28.5%, 68.9%, and 84.8%, respectively, in Vary1N, 9.2%, 38.8%, and 56.3%, respectively, in Vary3N, and 5.6%, 32.0%, and 53.0%, respectively, in Sta5N.

In addition, the correlation coefficients between the average improvements in speech recognition scores and the average amount of noise reduction were calculated (Fig. 9). The correlation coefficient was 0.85, revealing a strong and significant correlation between the two variables. Further, approximately 73% of the var-

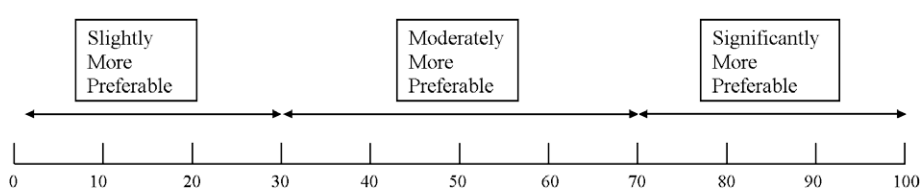

Fig. 7. The overall sound quality preference rating scale. The scale used by listeners to rate their overall sound quality preferences.

Table 2
The amount of noise reduction in dB provided by the fixed (FDM) and adaptive (ADM) directional microphone for each HINT sentence in the 3 noise conditions (Vary1N, Vary3N, and Sta5N) and their corresponding average improvement in speech recognition scores (Avg. SI improvement).

Sentence	Vary1N			Vary3N			Sta5N		
	FDM_OM	ADM_OM	ADM_FDM	FDM_OM	ADM_OM	ADM_FDM	FDM_OM	ADM_OM	ADM_FDM
1	9.4	8.9	−0.5	12.7	9.9	−2.7	6.2	7.7	1.5
2	3.6	14.4	10.8	7.2	14.5	7.3	6.2	7.7	1.5
3	11.8	13.5	1.7	4.2	4.3	0.2	6.2	7.7	1.5
4	9.5	9.0	−0.6	2.9	6.9	4.0	6.2	7.7	1.5
5	8.9	14.1	5.2	3.5	9.2	5.7	6.3	7.7	1.4
6	1.0	10.8	9.8	7.7	11.8	4.1	6.2	7.7	1.5
7	11.9	13.5	1.6	6.2	5.6	−0.7	6.2	7.7	1.5
8	1.1	10.8	9.7	1.8	8.7	6.9	6.2	7.7	1.5
9	9.0	14.1	5.1	5.2	8.4	3.2	6.2	7.7	1.5
10	3.7	14.4	10.8	10.5	8.0	−2.5	6.2	7.7	1.5
AvgNR	7.0	12.3	5.3	6.2	8.7	2.5	6.2	7.7	1.5
Avg. SI improvement	40.5	56.3	15.9	29.6	47.1	17.6	26.5	47.4	20.9

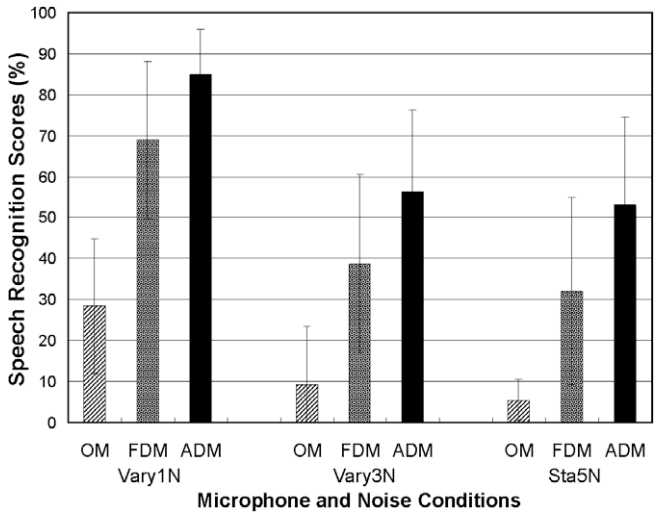

Fig. 8. Average speech recognition scores. The speech recognition scores obtained by the cochlear implant listeners in the three microphone modes (OM, FDM, and ADM) and three noise conditions (Vary1N, Vary3N, and Sta5N).

iation in speech recognition scores could be attributed to the variation in the amount of noise reduction (i.e., $r^2 = 0.73$).

3.3. Overall sound quality preferences

Fig. 10 shows the average score and the standard deviation of each test combination for the listener group. The low average scores ($\leqslant$5.5 points) and low standard deviations ($\leqslant$7.7 points) of the reference pairs indicated that the listeners were reliable in their ratings.

The paired-sample Wilcoxon Signed Rank Test was conducted for each combination. The results indicated the preference scores obtained for each microphone were significantly different in all combinations (p<.004, adjusted for 12 tests). In general, ADM received the highest preference scores and OM received the lowest scores. ADM was rated more preferable than OM in all noise conditions (i.e., 50.8, 36.1, and 35.0 points higher in Vary1N, Vary3N and Sta5N, respectively). FDM was rated more preferable (25.0–26.5 points higher) than OM in all noise conditions. In addition, ADM was rated more preferable than FDM in all noise conditions (i.e., 28.3, 11.1, 14.0 points higher in Vary1N, Vary3N, and Sta5N, respectively).

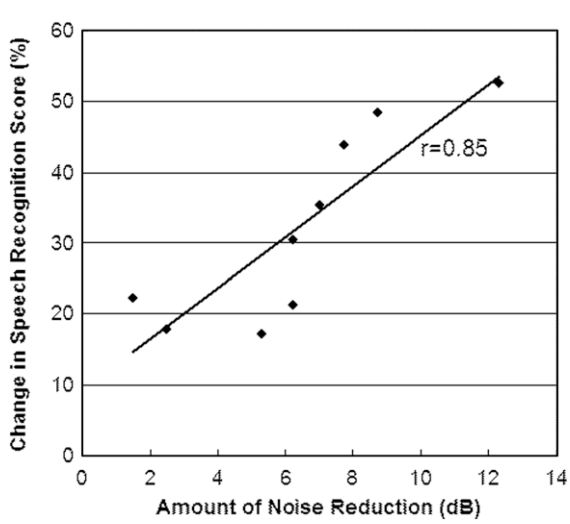

Fig. 9. Correlation. The correlation between the speech recognition improvement and the amount of noise reduction.

4. Discussion

Directional microphones, whether fixed or adaptive, improve speech recognition scores by reducing the noise level and increasing the SNR. Compared to OM, ADM improved speech recognition scores by 47–56% and enhanced the overall sound quality preference scores by 35–51 points. It also produced 16–21% higher speech recognition scores and 11–14 points higher preference scores than FDM, suggesting ADM has great potential in easing the communication difficulties experienced by cochlear implant users in various environments.

Inspections of the measurement results of this study revealed that at least six factors were found to affect the noise level in the recordings, namely, the microphone mode, the number of noise sources, noise locations, real-ear polar patterns of the microphones, dominant frequencies of the noise source(s), the frequency response of the hearing aid, and the optimization of the adaptive directional microphone algorithm.

The effect of the microphone mode and the number of noise sources(s) on the noise levels can be readily compared by examining the temporal envelopes in Fig. 6 and the amount of noise reduction among the microphone modes in Table 2. ADM was generally more effective in reducing background noise than FDM which, in turn, was more effective than OM. The amount of reduction, however, decreased as the number of noise sources increased. These findings were consistent with previous studies showing that adaptive directional microphones provided better directional benefits than fixed directional microphones with a few fixed or moving noise sources (Kompis and Dillier, 2001; Ricketts and Henry, 2002; Mackenzie and Lutman, 2005; Blamey et al., 2006; Maj et al., 2004, 2006).

The effects of noise location and real-ear polar patterns of the microphones can be examined through the integration of the information shown in Figs. 4–6. A study by Leeuw and Dreschler (1991) showed that the microphone output for sounds is affected by the polar sensitivity of the microphone when the sound source is located within the critical distance. In this study, all speech and noise sources were within the critical distance of the loudspeakers. Fig. 4 shows that FDM had the lowest sensitivity at 90°, 100°, and 270°. Fig. 6 shows that Sentences 1, 3, 4, and 7 in Vary1N had the lowest noise levels because noise was presented at 90° or 270°.

The noise level at the hearing aid output was also affected by the dominant frequencies of the noise sources and the hearing aid frequency responses. For example, in the OM recordings made in the Vary3N condition, Sentences 1 and 10 had the highest noise level and both sentences had noise presented from 90° and 270° azimuths. Although Sentences 3 and 7 also had noise sources located at 90° and 270° azimuths, their noise levels were among the lowest. This was likely due to BPN had energy concentration between 2000 and 3000 Hz (Fig. 5) and OM was 10 dB less sensitive between 235° and 270° azimuths than at 90° at 2000 Hz (Fig. 4). BPN, therefore, contributed considerable amount to the noise level when it was presented at 90° (Sentences 1 and 10) but to a much less extend when it was presented at 235° or 270° (Sentences 3 and 7, Fig. 6).

Although polar pattern of ADM could not be measured, the effects of noise location and dominant frequency contents of noise are manifested in two phenomena. First, ADM provided the highest amount of noise reduction in sentences with more focused noise sources (e.g., Sentences 2, 5, and 8 in Fig. 7 and Table 2) than sentences with noise sources spreading to wider regions (e.g., Sentences 3 and 7). Second, the noise locations were identical for Sentences 4 and 10 in Vary3N (Fig. 7) but the locations of the HPN, BPN, and MixedN were different. Yet, ADM (and FDM) pro-

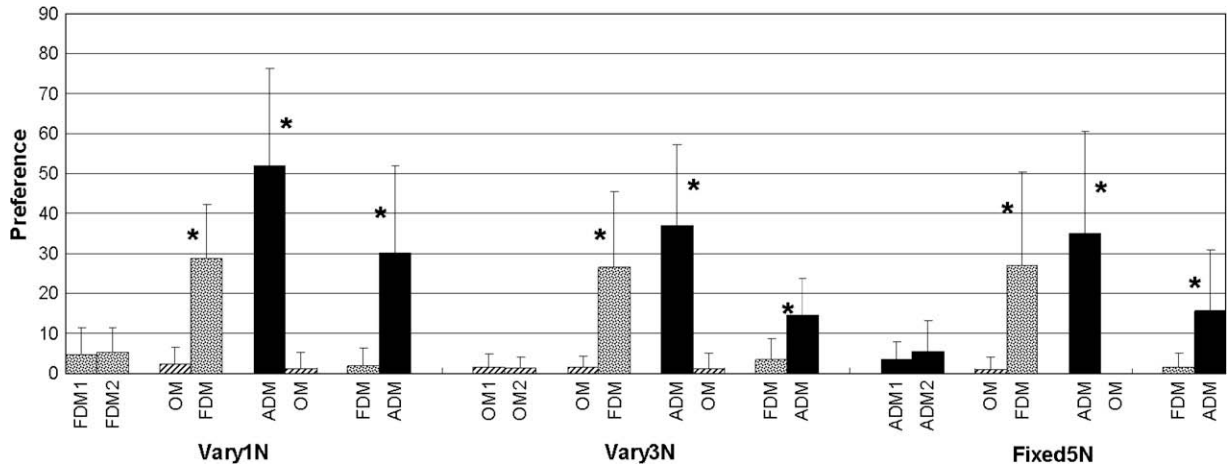

Fig. 10. Overall sound quality preference scores. Average and standard deviations of overall sound quality preference scores obtained in reference and test combinations. Asterisks mark the conditions yielded significantly different preferences ($p < .004$).

vided different amounts of noise reduction in these sentences (Table 2), again revealing the influence of both noise location and dominant frequency contents of noise.

The optimization of the ADM can further affect the noise level in the recording. As ADM was calculated in-situ and in real-time but FDM was pre-set in the manufacturing facility, a well designed ADM should always yield equal or lower amounts of noise than FDM at all times. Although ADM generally yielded the lowest noise levels among the three microphones, it produced less noise reduction than FDM in some sentences (i.e., Sentences 1 and 4 in Vary1N and Sentences 1, 7, 10, in Vary3N, Table 2). It seemed that the polar pattern of FDM was more effective than that adopted by ADM when the noises were located at 90° and/or 270° azimuths, which were the common noise location(s) of the six sentences. These results suggested that this particular adaptive directional microphone could be further optimized to provide equal or better results than FDM in all noise environments.

A caution in interpreting the results is that improvements due to directional microphones obtained in the laboratories may not always translate to higher perceived speech intelligibility or preference ratings in real-world environments (Mueller et al., 1983; Walden et al., 2000; Cord et al., 2002, 2004; Surr et al., 2002; Ricketts et al., 2003; Spriet et al., 2007). The discrepancy can be attributed to reverberation and/or critical distance in the listening environments, relative locations of the signal and noise, the type and/or location of noise encountered, the percentage of time the use of directional microphone is needed (see Chung (2004) for a detailed review). The FDM and ADM benefits obtained in this study can be reduced in listening environments with different acoustic characteristics.

Taken together, although many factors can influence the amount of noise reduction provided by directional microphones, well-designed adaptive directional microphones can potentially reduce noise level, increase SNR, and enhance cochlear implant performance in background noise. As data collected in laboratories may not reflect the directional benefits in daily listening environments, further studies are needed to examine the benefits of adaptive directional microphones for cochlear implant users in daily listening environments. Future studies should also explore whether other signal processing technologies available in hearing aids (e.g., automatic telecoils, multi-channel adaptive directional microphones) can help cochlear implant users increase the convenience of device usage and achieve greater communication success in daily listening environments.

Acknowledgments

The authors thank Lance Nelson for data collection, Rachael Fischer for editing the testing materials, Nicholas McKibben for technical support, and Andrea Miller for data entry. This work was supported by New Investigator Award from American Academy of Audiology and a grant from National Institute of Health (2R01-DC002267).

Appendix A

The sentences used in testing overall sound quality ratings. They also provide examples for keyword scoring.

	No. of keywords
Vary1N – One moving noise	
1. She's washing her new silk dress.	(6)
2. Her husband brought some flowers.	(5)
3. (A/The) boy broke (a/the) wooden fence.	(4)
4. (A/The) sharp knife (is/was) dangerous.	(4)
5. They followed (a/the) garden path.	(4)
6. There (are/were) branches everywhere.	(4)
Vary3N – Three moving noise sources	
1. She's drinking from her own cup.	(6)
2. (A/The) picture came from (a/the) book.	(4)
3. (A/The) boy ran down (a/the) path.	(4)
4. Strawberry jam (is/was) sweet.	(4)
5. (A/The) new road (is/was) on (a/the) map.	(5)
6. (A/The) nervous driver got lost.	(4)
Sta5N – Five stationary noise sources	
1. Big dogs can be dangerous.	(5)
2. (A/The) football hit (a/the) goalpost.	(3)
3. (A/The) boy ran away from school.	(5)
4. The two children (are/were) laughing.	(3)
5. They're buying some fresh bread.	(5)
6. (A/The) cow (is/was) milked everyday.	(3)

Note: Words underlined are keywords; words in parentheses are interchangeable.

References

Blamey, P.J., Fiket, H.J., Steele, B.R., 2006. Improving speech intelligibility in background noise with an adaptive directional microphone. J. Am. Acad. Audiol. 17, 519–530.

Bentler, R.A., Tubbs, J.L., Egge, J.L.M., Flamme, G.A., Dittberner, A.B., 2004. Evaluation of an adaptive directional system in a DSP hearing aid. Am. J. Audiol. 13, 73–79.

Bentler, R.A., Palmer, C., Mueller, H.G., 2006. Evaluation of a second-order directional microphone hearing aid: I. Speech perception outcomes. J. Am. Acad. Audiol. 27, 179–189.
Berghe, J.V., Wouters, J., 2005. Hearing aid with adaptive noise canceller. US Patent 6,888,949 B1.
Burkhard, M.D., Sachs, R.M., 1975. Anthropometric manikin for acoustic research. J. Acoust. Soc. Am. 58, 214–222.
Chung, K., Zeng, F.G., Waltzman, S., 2004. Using hearing aid directional microphones and noise reduction algorithms to enhance cochlear implant performance. Acoust. Res. Lett. 5, 56–61 (Online).
Chung, K., 2004. Challenges and recent developments in hearing aids. Part I: Speech understanding in noise, microphone technologies and noise reduction algorithms. Trends Amplif. 8, 83–124.
Chung, K., Zeng, F.G., Acker, K.N., 2006. Effects of directional microphone and adaptive multichannel noise reduction algorithm on cochlear implant performance. J. Acoust. Soc. Am. 120, 2216–2227.
Cord, M.T., Surr, R.K., Walden, B.E., Olsen, L., 2002. Influence of environmental factors on hearing aid microphone preference. J. Acoust. Soc. Am. 13, 295–307.
Cord, M.T., Surr, R.K., Walden, B.E., Dyrlund, O., 2004. Relationship between laboratory measures of directional advantage and everyday success with directional microphone hearing aids. J. Am. Acad. Audiol. 15 (5), 353–364.
Greenberg, J.E., Zurek, P.M., 1992. Evaluation of an adaptive beamforming method for hearing aids. J. Acoust. Soc. Am. 91, 1662–1676.
Independent Hearing Aid Fitting Forum, 1994. Comprehensive hearing aid fitting protocol for the 21st century. Jackson Hole, WY.
Jensen, L.B., 2006. Hearing aid, a method of controlling a hearing aid, and a noise reduction system for a hearing aid. US Patent 7,010,134 B2.
Kompis, M., Dillier, N., 2001. Performance of an adaptive beamforming noise reduction scheme for hearing aid applications. II. Experimental verification of the predictions. J. Acoust. Soc. Am. 109, 1134–1143.
Kuk, F., Keenan, D., Lau, C.-C., Ludvigsen, C., 2005. Performance of a fully adaptive directional microphone to signals presented from various azimuths. J. Am. Acad. Audiol. 16, 333–347.
Leeuw, A.R., Dreschler, W.A., 1991. Advantages of directional hearing aid microphones related to room acoustics. Audiology 30, 330–344.
Mackenzie, E., Lutman, M.E., 2005. Speech recognition and comfort using hearing instruments with adaptive directional characteristics in asymmetric listening conditions. Ear Hear. 26, 669–679.
Maj, J-B., Royackers, L., Wouters, J., Moonen, M., 2006. Comparison of adaptive noise reduction algorithms in dual microphone hearing aids. Sp. Com. 48, 957–970.
Maj, J., Wouters, J., Moonen, M., 2004. Noise reduction results on an adaptive filtering technique for dual-microphone behind-the-ear hearing aids. Ear Hear. 25, 215–229.
Mueller, H.G., Grimes, A.M., Erdman, S.A., 1983. Directional microphone. Hear. Instrum. 34 (2), 14–16. 47, 48.
Nelson, P.B., Jin, S.B., Carney, A.E., Nelson, D.A., 2003. Understanding speech in modulated interference: cochlear implant users and normal-hearing listeners. J. Acoust. Soc. Am. 113 (2), 961–968.
Nilsson, M.J., Soli, S.D., Sullivan, J., 1994. Development of a hearing in noise test for the measurement of speech reception threshold. J. Acoust. Soc. Am. 95, 1985–1999.
Palmer, C., Bentler, R.A., Mueller, G.H., 2006. Evaluation of a second-order directional microphone hearing aid: II. Self-report outcomes. J. Am. Acad. Audiol. 27, 190–201.
Pearsons, K.S., Bennett, R.L., Fidell, S., 1976. Speech levels in various noise environments. U.S. Environmental Protection Agency, Environmental Health Effects Research Series Report No. EPA-60011-77-025, NTIS, Washington, DC.
Powers, T., Hamacher, V., 2002. Three microphone instrument is designed to extend benefits of directionality. Hear. J. 55 (10), 38–45.
Ricketts, T.A., 2001. Directional hearing aids. Trends Amplif. 5 (4), 139–176.
Ricketts, T.A., Henry, P., 2002. Evaluation of an adaptive directional-microphone hearing aid. Int. J. Audiol. 41, 100–112.
Ricketts, T.A., Henry, P., Gnewikow, D., 2003. Full time directional versus user selectable microphone modes in hearing aids. Ear Hear. 24, 424–439.
Spriet, A., Van Deun, L., Eftaxiadis, K., Laneau, J., Moonen, M., van Dijk, B., van Wieringen, A., Wouters, J., 2007. Speech understanding in background noise with the two-microphone adaptive beamformer BEAM™ in the Nucleus Freedom™ cochlear implant system. Ear Hear. 28 (1), 62–72.
Stickney, G.S., Zeng, F.-G., Litovsky, R., Assmann, P., 2004. Cochlear implant speech recognition with speech maskers. J. Acoust. Soc. Am. 116 (2), 1081–1091.
Surr, R.K., Walden, B.E., Cord, M.T., Olsen, L., 2002. Influence of environmental factors on hearing aid microphone preference. J. Am. Acad. Audiol. 13 (6), 308–322.
Thompson, S.C., 2003. Tutorial on microphone technologies for directional hearing aids. Hear. J. 56 (11), 14–21.
Valente, M., 1999. Use of microphone technology to improve user performance in noise. Trends Amplif. 4 (3), 112–135.
van Hoesel, R., Clark, G.M., 1995. Evaluation of a portable two-microphone adaptive beamforming speech processor with cochlear implant patients. J. Acoust. Soc. Am. 97, 2498–2503.
Walden, B.E., Surr, R.K., Cord, M.T., Edwards, B., Olson, L., 2000. Comparison of benefits provided by different hearing aid technologies. J. Am. Acad. Aud. 11, 540–560.
Wouters, J., Vanden Berghe, J., 2001. Speech recognition in noise for cochlear implantees with a two-microphone monaural adaptive noise reduction system. Ear Hear. 22, 420–430.
Zeng, F.-G., 2004. Trends in cochlear implants. Trends Amplif. 8, 1–34.
Zeng, F.-G., Nie, K., Stickney, G.S., Kong, Y.Y., Vongphoe, M., Bhargave, A., Wei, C., Cao, K., 2005. Speech recognition with amplitude and frequency modulations. Proc. Natl. Acad. Sci. USA 102 (7), 2293–2298.