Bruce Francis and H_∞ Control Theory

Session to Honor Bruce Francis
December 18, 2019
IEEE Conference on Decision and Control
Miami

Pramod P. Khargonekar
University of California, Irvine

UCI University of California, Irvine

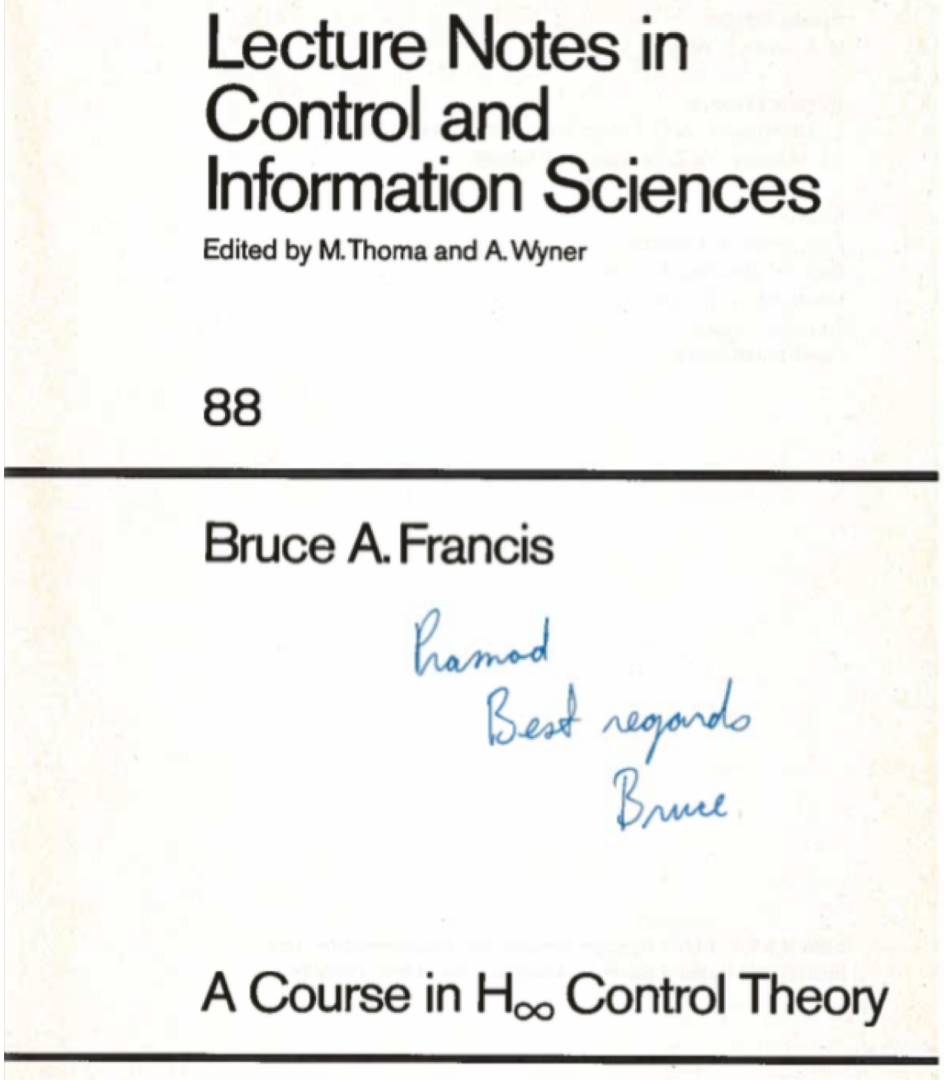

From the Preface to the book

"My aim in this book us to give an elementary treatment of linear control theory with an H_∞ optimality criterion …"

"Only one problem is solved in this book: how to design a controller which minimizes … "

"It is a pleasure to express my gratitude to George Zames, Bill Helton, and John Doyle."

Background and Context

Zames (1981) – “Feedback and optimal sensitivity …”

Zames and Francis (1983), Francis and Zames (1983, 1984)
- H_∞ formalism and solution to the scalar case

Francis, Helton, Zames (1984) – Multivariable case solution

Doyle (1984) – Honeywell-ONR workshop lecture notes

Francis and Doyle (1986) – Linear control theory with an H_∞ optimality criterion

Outline and Structure of the Book

Eight chapters, 132 pages

Background mathematics: Chapters 2, 5, 7

Background control: Chapters 3, 4

Scalar case solution: Chapter 6

Multivariable case: Chapter 8

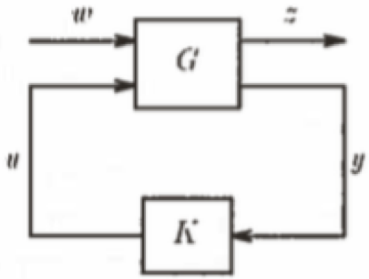

Figure 3.1. The standard block diagram

Sets up the standard problem: minimize the norm of the closed loop transfer function T_{zw}

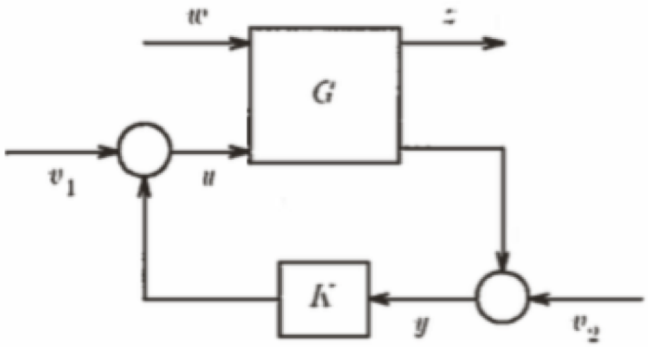

Figure 3.2. Diagram for stability definition

Sets up stability of the closed-loop: all closed-loop transfer functions in Figure 3.2 are stable

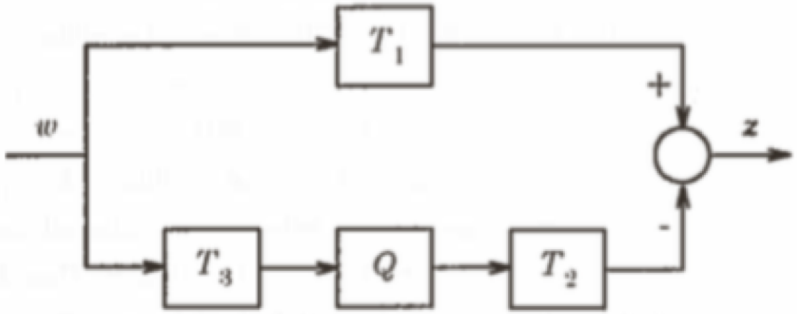

Figure 3.3. Model-matching

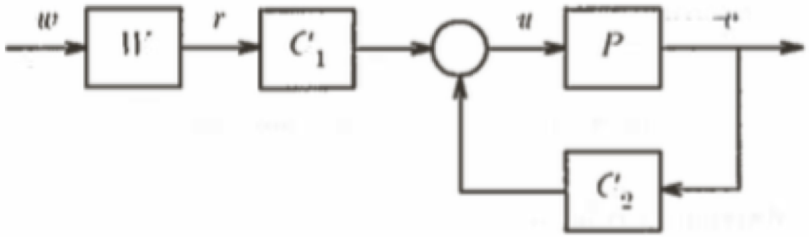

Figure 3.4. Tracking

Two special cases:

A model matching problem: minimize the norm of

$$T_1 - T_2 Q T_3$$

A tracking problem: minimize the norm of T_{zw} where

$$z = \begin{bmatrix} r - v \\ \rho u \end{bmatrix}$$

YJBK Parametrization via Coprime Factorization

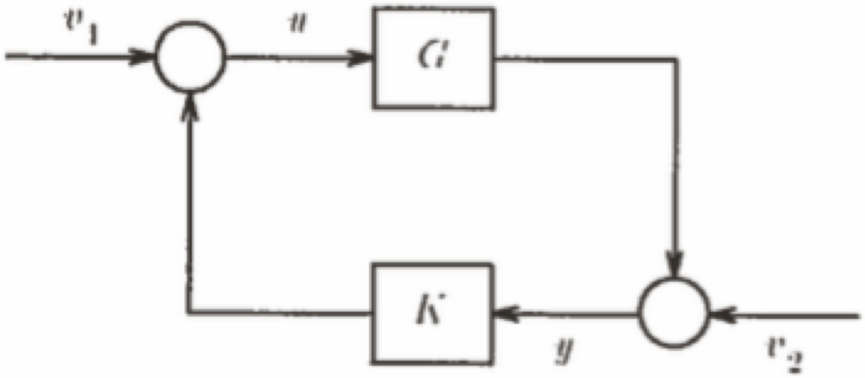

Figure 4.4.1. Diagram for controller parametrization

$$G = NM^{-1} = \tilde{M}^{-1}\tilde{N}$$

$$\begin{bmatrix} \tilde{X} & -\tilde{Y} \\ -\tilde{N} & \tilde{M} \end{bmatrix} \begin{bmatrix} M & Y \\ N & X \end{bmatrix} = I$$

Pages 36-38, Section 4.4

Lemma 1. The following are equivalent statements about K:

(i) K stabilizes G,

(ii) $\begin{bmatrix} M & U \\ N & V \end{bmatrix}^{-1} \in \mathbf{RH}_\infty$,

(iii) $\begin{bmatrix} \tilde{V} & -\tilde{U} \\ -\tilde{N} & \tilde{M} \end{bmatrix}^{-1} \in \mathbf{RH}_\infty$.

The main result of this chapter is the following.

Theorem 1. The set of all (proper real-rational) K's stabilizing G is parametrized by the formulas

$$K = (Y - MQ)(X - NQ)^{-1} \tag{2}$$

$$= (\tilde{X} - Q\tilde{N})^{-1}(\tilde{Y} - Q\tilde{M}) \tag{3}$$

$$Q \in \mathbf{RH}_\infty .$$

Proof. Let's first prove equality (3). Let $Q \in \mathbf{RH}_\infty$. From (1) we have

$$\begin{bmatrix} I & Q \\ 0 & I \end{bmatrix} \begin{bmatrix} \tilde{X} & -\tilde{Y} \\ -\tilde{N} & \tilde{M} \end{bmatrix} \begin{bmatrix} M & Y \\ N & X \end{bmatrix} \begin{bmatrix} I & -Q \\ 0 & I \end{bmatrix} = I$$

so that

$$\begin{bmatrix} \tilde{X} - Q\tilde{N} & -(\tilde{Y} - Q\tilde{M}) \\ -\tilde{N} & \tilde{M} \end{bmatrix} \begin{bmatrix} M & Y - MQ \\ N & X - NQ \end{bmatrix} = I . \tag{4}$$

Equating the (1,2)-blocks on each side in (4) gives

$$(\tilde{X} - Q\tilde{N})(Y - MQ) = (\tilde{Y} - Q\tilde{M})(X - NQ),$$

which is equivalent to (3).

Page 38 in the book

Chapter 5: Hankel Operators and Nehari's Theorem

Notation

$$\Pi_1 : L_2 \to H_2^{\perp}$$ Orthogonal projection

$$F \in L_\infty$$

$$\Lambda_F(g) = Fg, g \in L_2$$ Toeplitz operator

$$\Gamma_F = \Pi_1 \Lambda_F \mid H_2$$ Hankel operator

Theorem: There exists a closest H_∞ matrix X to a given L_∞ matrix R and

$$\|(R - X))\| = \|\Gamma_R\|$$

Page 59, Section 5.2

Model Matching Problem – Scalar Case

Minimize norm of $$T_1 - T_2 Q$$

Inner function: T(s) is inner if $T(-s)T(s) = 1$

Outer function: T(s) is outer if it has no zeros in $Re(s) > 0$

Inner-Outer Factorization: $T(s) = T_i(s)T_o(s)$

If T has no zeros on the imaginary axis then inverse of T_o is also in H_∞

$$R := T_{2i}^{-1} T_1 \qquad X := T_{2o} Q$$

Scalar Case Solution via Nehari Theorem

Theorem 1. The infimal model-matching error α equals $\|\Gamma_R\|$, the unique optimal X equals $R - \alpha f/g$, and, for the optimal Q, $T_1 - T_2 Q$ is all-pass.

Proof. From Nehari's theorem there exists a function X in $\mathbf{H}_\infty$ such that

$$\|R - X\|_\infty = \|\Gamma_R\| . \tag{18}$$

It is claimed that

$$(R - X)g = \Gamma_R g . \tag{19}$$

To prove this, define $h := (R - X)g$ and look at the $\mathbf{L}_2$-norm of $h - \Gamma_R g$:

$$\|h - \Gamma_R g\|_2^2 = \langle h - \Gamma_R g, h - \Gamma_R g \rangle$$

Book

Elegant

Self contained

Focused

State-of-the-art

Sparingly written

Ideal for new graduate students

Remembering Bruce Francis: A Great Scholar and a True Gentleman

PRAMOD P. KHARGONEKAR

Thank you, Bruce, for being a role model and an inspiration.